Product datasheet
SIG 64005

SIRIUS | Low-voltage halogen lamps with dichroic reflector, road traffic

- Road and rail traffic signals

- Fixed adjustment of halogen tube to reflector provides high luminous intensity
- Nearly constant luminous intensity due to high quality reflector coating
- Very long life due to the halogen tube

Product features

- Connecting cables equipped with contacts/insulation widely resistant to corrosion and heat

Product benefits

- Fixed adjustment of halogen tube to reflector provides high luminous intensity
- Nearly constant luminous intensity due to high quality reflector coating
- Very long life due to the halogen tube

Areas of application

- Road and rail traffic signals

© 2024, Inventronics GmbH. All rights reserved. Inventronics is a licensee of the OSRAM brand. OSRAM is a trademark of ams OSRAM.

Technical data

Electrical data

Nominal voltage	10.0 V

Photometrical data

Nominal luminous flux	250 lm
Luminous flux	250 lm

Light technical data

Focal length	42.0 mm
Aperture window, maximum	10.2 mm

Dimensions & weight

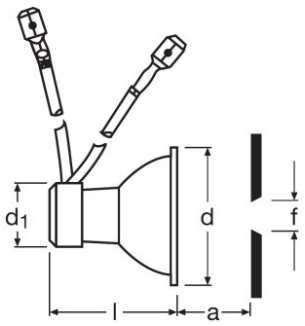

Base diameter	24.5 mm
Overall length	46.50 mm
Cable length	105.0
Product weight	38.00 g

Additional product data

Mercury-free	Yes

Environmental information

Information according Art. 33 of EU Regulation (EC) 1907/2006 (REACh)	
Date of Declaration	18-04-2022
Primary Article Identifier	4050300282060
Declaration No. in SCIP database	In work

© 2024, Inventronics GmbH. All rights reserved. Inventronics is a licensee of the OSRAM brand. OSRAM is a trademark of ams OSRAM.

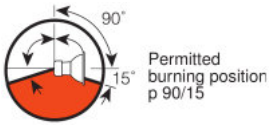

Ecodesign regulation information:

Separate control gear and light sources must be disposed of at certified disposal companies in accordance with Directive 2012/19/EU (WEEE) in the EU and with Waste Electrical and Electronic Equipment (WEEE) Regulations 2013 in the UK. For this purpose, collection points for recycling centres and take-back systems (CRSO) are available from retailers or private disposal companies, which accept separate control gear and light sources free of charge. In this way, raw materials are conserved and materials are recycled.

Logistical Data

Product code	Product description	Packaging unit (Pieces/Unit)	Dimensions (length x width x height)	Volume	Gross weight
4050300282060	SIG 64005	Shipping carton box 10 Pieces Folding carton box	267 mm x 114 mm x 60 mm	1.83 dm^3	544.00 g

The mentioned product code describes the smallest quantity unit which can be ordered. One shipping unit can contain one or more single products. When placing an order, for the quantity please enter single or multiples of a shipping unit.

Disclaimer

Subject to change without notice. Errors and omission excepted. Always make sure to use the most recent release.

OSRAM is distribution partner
of LEDVANCE of LAMPS

OSRAM

OSRAM GmbH
Marcel-Breuer-Strasse 6
80807 Munich, Germany

© 2024, Inventronics GmbH. All rights reserved. Inventronics is a licensee of the OSRAM brand. OSRAM is a trademark of ams OSRAM.